# MF-SCS-1672KWH
## BESS CONTAINER

10ft Battery & Boost Converter One Stop Solution

MasterPower®

Master Battery, S.L.
Paseo de extremadura, 39, 28935 Móstoles, Madrid, España
Tel. +34 918 021 649
info@masterbattery.es / www.masterbattery.es

MASTER BATTERY

MasterPower

# MF-SCS-1672KWH

## BESS CONTAINER

### 10ft Battery & Boost Converter
### One Stop Solution

## PRODUCT FUNCTION

- The BMS ensures safe and efficient operation of the battery by monitoring key parameters such as voltage, temperature, and charge/discharge status. It helps to extend battery life, improve performance, and prevent issues like overcharging or overheating.
- The UPS function ensures continuous power during grid failures or disruptions, maintaining stable operation of critical equipment like data centers or communication stations, thus enhancing system reliability.
- MF-SCS-5016KWH supports multi-unit parallel operation, enabling scalable capacity expansion. This feature ensures flexibility and reliability, making it suitable for both small and large-scale projects
- The EMS optimizes energy flow within the system, dynamically adjusting charging and discharging strategies based on demand and grid conditions. It enhances efficiency, reduces energy costs, and integrates with grid systems for stable power management.
- The 1500V DC battery system offers high energy density, low losses, and cost-efficiency. It is compatible with most PCS on the market, making it adaptable to various renewable energy and grid applications.
- Equipped with advanced fire protection features, including temperature control and fire detection systems, MF-SCS-5016KWH ensures safety by automatically activating emergency measures in case of abnormal conditions, minimizing fire risks.

## PRODUCT FEATURES

- The liquid cooling system battery box offers the highest capacity with the latest dimensions, requiring minimal space while providing flexible transportation and installation options.
- Featuring a modular structure and an efficient liquid cooling system, it is designed to perform well in extreme environments, maximizing battery lifespan and performance.
- Equipped with comprehensive battery monitoring, multi-layer fire prevention, top ventilation design, and active AI management to ensure maximum safety and reliability.
- Comes with a complete EMS that is easy to upgrade, featuring big data management checks, proactive handling, and intelligent SOC calibration to ensure optimal performance with zero downtime.

Master Battery, S.L.
Paseo de extremadura, 39, 28935 Móstoles, Madrid, España
Tel. +34 918 021 649
info@masterbattery.es / www.masterbattery.es

MASTER BATTERY

MasterPower

# MF-SCS-1672KWH

## BESS CONTAINER

### 10ft Battery & Boost Converter
### One Stop Solution

## APPLICATION SCENARIO

COMMUNITY

LOWERCASE

ELECTRICITY GENERATING

Master Battery, S.L.
Paseo de extremadura, 39, 28935 Móstoles, Madrid, España
Tel. +34 918 021 649
info@masterbattery.es / www.masterbattery.es

MASTER BATTERY

MasterPower

# MF-SCS-1672KWH

## BESS CONTAINER

### 10ft Battery & Boost Converter
### One Stop Solution

## BESS PARAMETER

| Battery Energy Storage | |
|---|---|
| Cell Type | LFP 3.2V/314Ah |
| Module Configuration | 1P104S |
| String Configuration | 1P416S |
| Number of Battery System | 1 |
| Number of Strings | 4 |
| Capacity (kWh) | 1672 |
| Nominal Voltage (V) | 1331.2 |
| Operation Voltage Range (Vdc) | 1218.88~1476.8 |
| Discharge Depth | 90% DoD |
| Thermal Management Mode | Liquid Cooling |
| Thermal Control Management | Aerosol Extinguishing or PFH |

| AC Output | |
|---|---|
| AC Output Power(kVA) | 860 |
| Rated Output | 690V, 3W+PE |
| Rated Grid Frequency(Hz) | 50/60 |
| Power Factor | -1~1 |
| THDi | <1.5% (100% load) |

Master Battery, S.L.
Paseo de extremadura, 39, 28935 Móstoles, Madrid, España
Tel. +34 918 021 649
info@masterbattery.es / www.masterbattery.es

MASTER BATTERY

MasterPower

# MF-SCS-1672KWH

## BESS CONTAINER

### 10ft Battery & Boost Converter
### One Stop Solution

| System Characteristics | |
|---|---|
| Communication | CAN, RS485, Ethernet |
| Warranty | 3 years free, paid from |
| Systerm Certifications | IEC 62619, IEC 62477, |
| PCS Certifications | EN/IEC 62477-1, IEC 60068-2-6:2007, IEC 61683, EN/IEC 61000-6-2, EN/IEC |

| General Parameters | |
|---|---|
| Product Model | MF-SCS-1672KWH |
| Dimensions - D*H (mm) | 2438*2591 |
| Dimensions - W (mm) | 2991 |
| Battery System Total | ~15000 |
| Operation Altitude | 4000m / 13000feet(>3000m/10000feet derating) |
| Nosie Level 1m | <75dB |
| IP Rating | IP54 |
| Operation Temperature (°C/°F) | -20~55/-4~131 (De-rating over 45°C/113°F) |
| Operation Humidity (RH) | ≤95%, No condensation |
| Storage Conditons | -20°C to 30°C, Up to 95% RH, non-condensing, State of Energy (SoE): 50% initial |

Master Battery, S.L.
Paseo de extremadura, 39, 28935 Móstoles, Madrid, España
Tel. +34 918 021 649
info@masterbattery.es / www.masterbattery.es

MASTER BATTERY

# MF-SCS-1672KWH

## BESS CONTAINER

### 10ft Battery & Boost Converter
### One Stop Solution

## PRODUCT TOPOLOGY

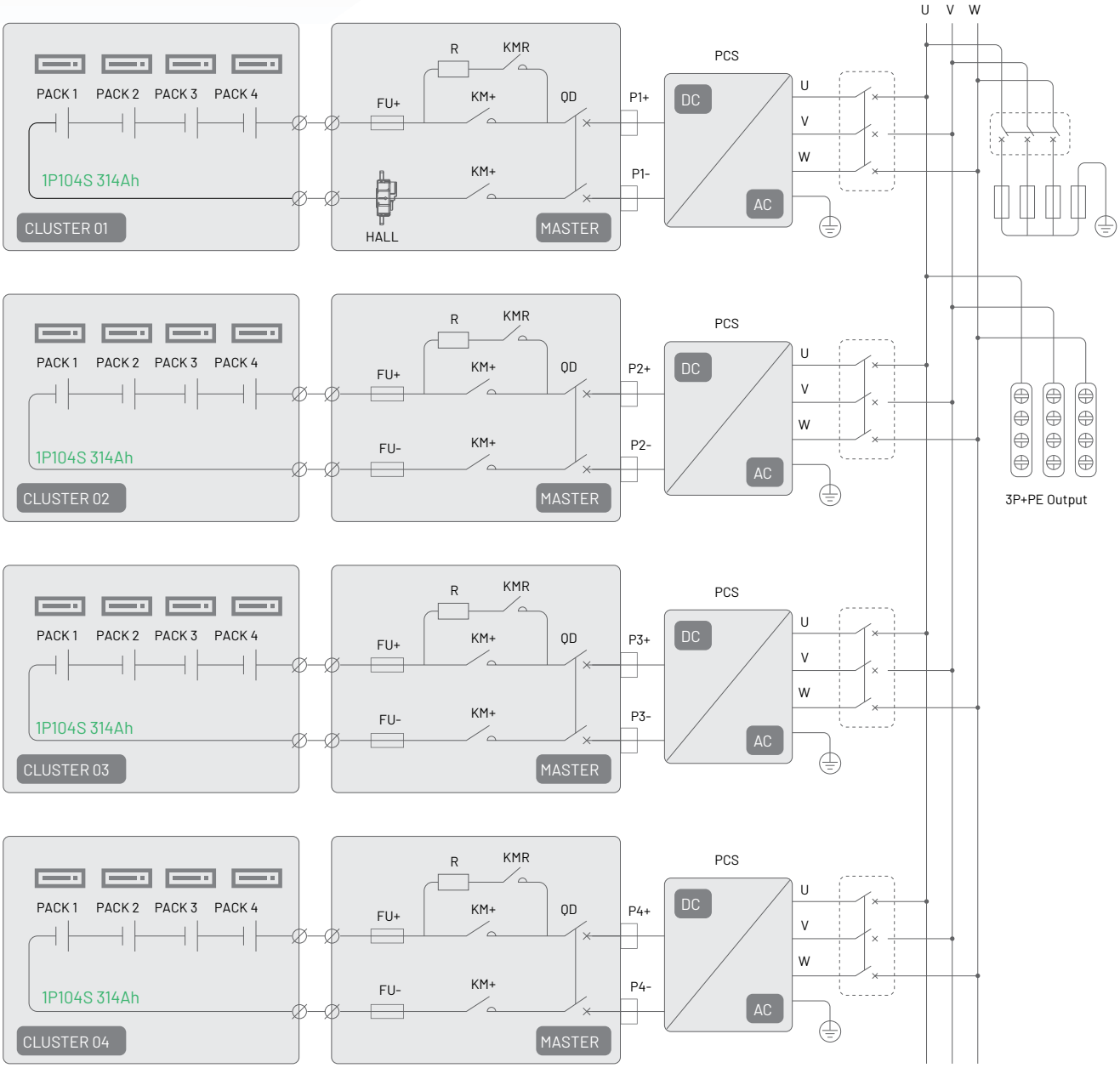



Master Battery, S.L.
Paseo de extremadura, 39, 28935 Móstoles, Madrid, España
Tel. +34 918 021 649
info@masterbattery.es / www.masterbattery.es

# MF-SCS-1672KWH

## BESS CONTAINER

### 10ft Battery & Boost Converter
### One Stop Solution

## PACKAGING & SHIPPING DETAILS

1*Battery System
2438*2991*2591 mm
~15000 kg

2*Battery System
2438*5982*2591 mm
~30000 kg

## SINGLE / MAX. PARALLEL SYSTEM LAYOUT

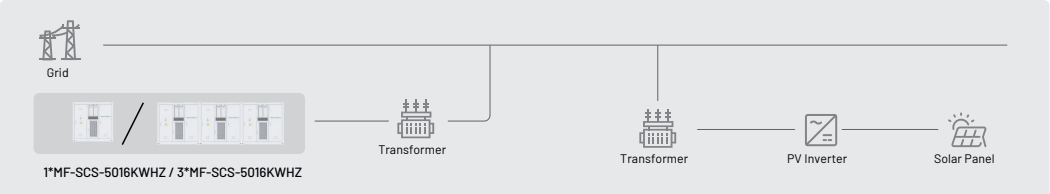


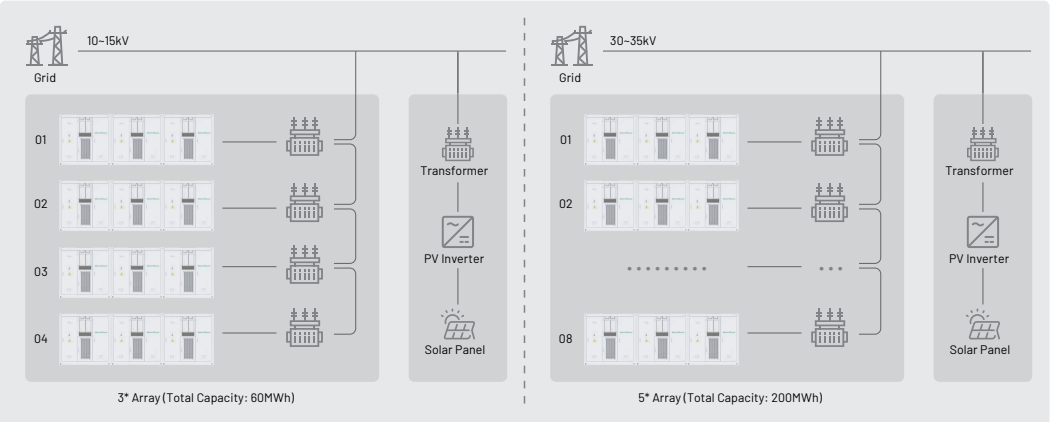


Master Battery, S.L.
Paseo de extremadura, 39, 28935 Móstoles, Madrid, España
Tel. +34 918 021 649
info@masterbattery.es / www.masterbattery.es

# MF-SCS-1672KWH

## BESS CONTAINER

### 10ft Battery & Boost Converter
### One Stop Solution

## ENERGY MANAGEMENT SYSTEM (EMS) STRUCTURE

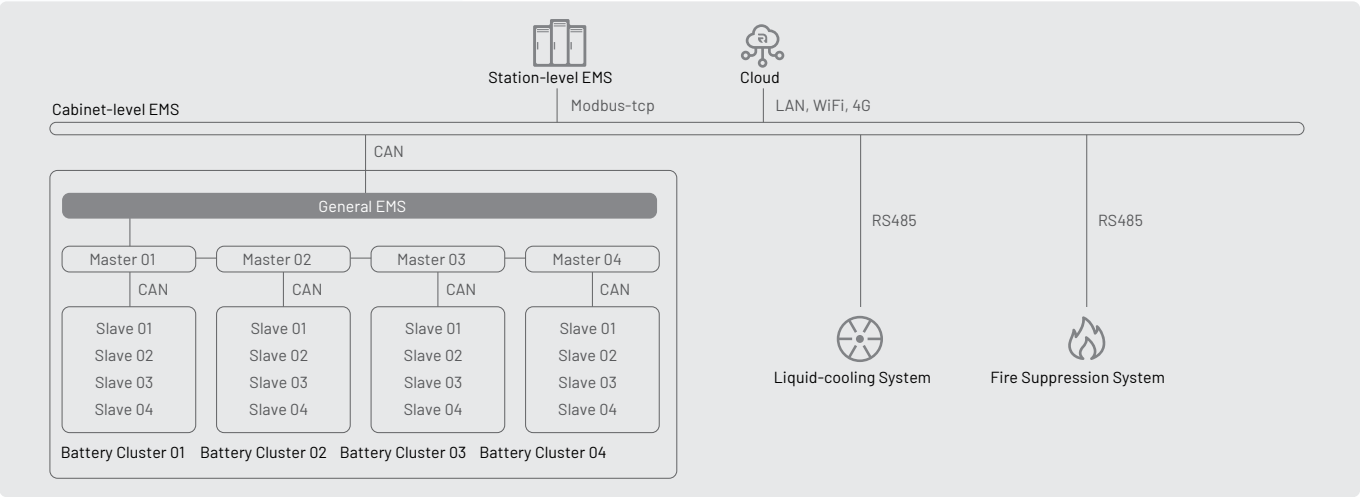


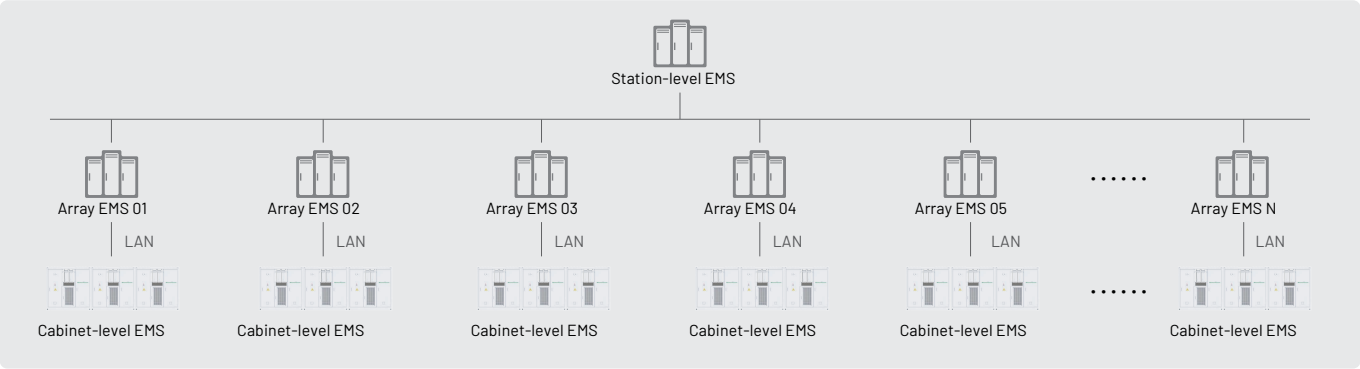



Master Battery, S.L.
Paseo de extremadura, 39, 28935 Móstoles, Madrid, España
Tel. +34 918 021 649
info@masterbattery.es / www.masterbattery.es